zehnder Rittling

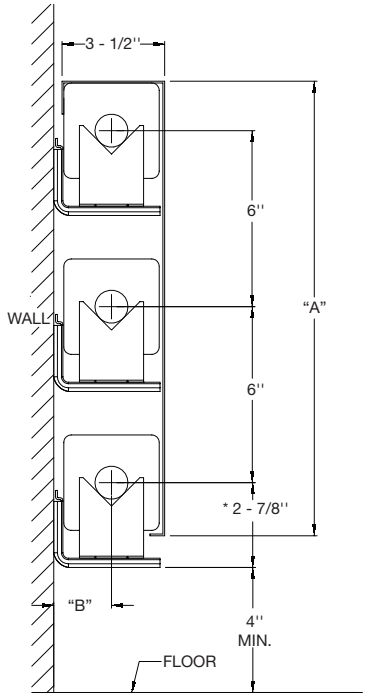

* CENTERLINES ARE BASED ON 1'' COPPER TUBE

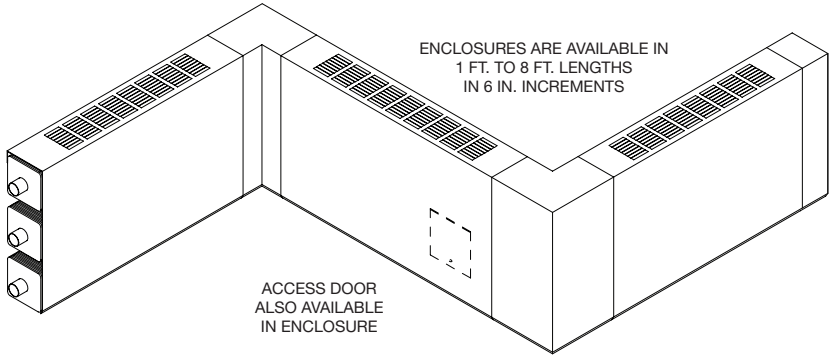

ACCESSORIES

SLIP - IN SECOND
ROW BRACKET

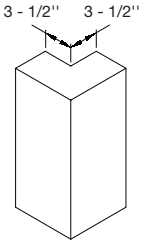

"OC"
OUTSIDE CORNER

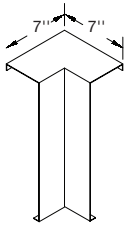

"IC"
INSIDE CORNER

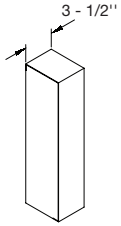

"EC"
END CAP
(LEFT HAND SHOWN)

"WT"
WALL TRIM STRIP
3 - 1/2'', 5'', 7 - 1/2''

MODEL	PIPE SIZE		FIN SIZE	A	B
	STEEL	COPPER			
ETO	1 - 1/4'' - 2''	1'', 1 - 1/4''	3 - 1/4'' x 3 -1/4''	3 - 5/8'' 9 - 5/8'' 15 - 5/8''	1 - 31/32''

* ALL ACCESSORIES OVERLAP
** BUTT - TYPE OPTIONAL

ISO 9001
BUREAU VERITAS
Certification
Nº 209940

CONTRACTOR _____ ELEMENT _____

ARCHITECT _____ RATING _____ BTU _____ A.W.T. _____ E.A.T.

ENGINEER _____ BACKPLATE _____ FULL _____ PARTIAL _____

REPRESENTATIVE _____ ENCL. GAUGE _____ MATERIAL _____

LOCATION _____ COLOR _____ DAMPER _____

ZEHNDER RITTLING
100 RITTLING BLVD. • BUFFALO, NY USA 14220

JOB:

ENCLOSURE MODEL: **ETO3**

DATE: **January 2011** | DWG.NO.: **ETO3**

zehnder Rittling

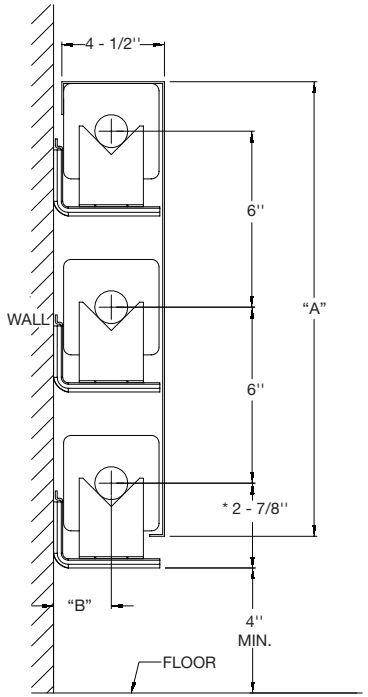

* CENTERLINES ARE BASED ON 1'' COPPER TUBE

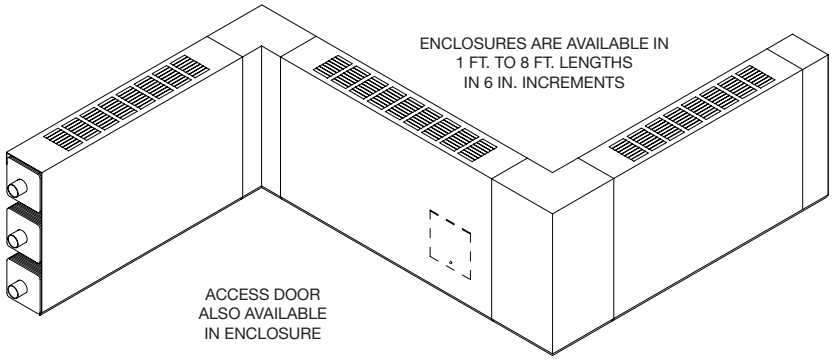

ACCESSORIES

SLIP - IN SECOND
ROW BRACKET

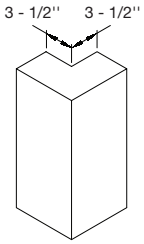

"OC"
OUTSIDE CORNER

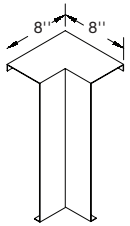

"IC"
INSIDE CORNER

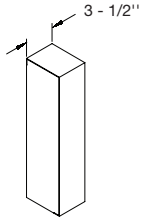

"EC"
END CAP
(LEFT HAND SHOWN)

"WT"
WALL TRIM STRIP
3 - 1/2'', 5'', 7 - 1/2''

MODEL	PIPE SIZE		FIN SIZE	A	B
	STEEL	COPPER			
ETO	1 - 1/4'' - 2''	1'', 1 - 1/4''	4 - 1/4'' x 4 -1/4''	4 - 5/8'' 10 - 5/8'' 16 - 5/8''	2 - 17/32''

* ALL ACCESSORIES OVERLAP
** BUTT - TYPE OPTIONAL

ISO 9001
BUREAU VERITAS
Certification
Nº 209940

CONTRACTOR _____ ELEMENT _____

ARCHITECT _____ RATING _____ BTU _____ A.W.T. _____ E.A.T.

ENGINEER _____ BACKPLATE _____ FULL _____ PARTIAL _____

REPRESENTATIVE _____ ENCL. GAUGE _____ MATERIAL _____

LOCATION _____ COLOR _____ DAMPER _____

ZEHNDER RITTLING
100 RITTLING BLVD. • BUFFALO, NY USA 14220

JOB:

ENCLOSURE MODEL: **ETO4**

DATE: **January 2011** | DWG.NO.: **ETO4**

zehnder Rittling

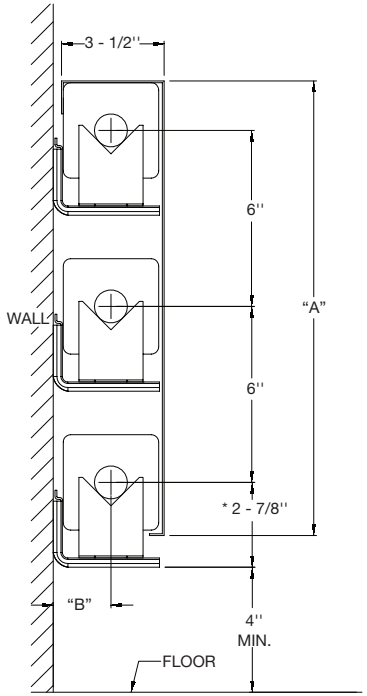

* CENTERLINES ARE BASED ON 1'' COPPER TUBE

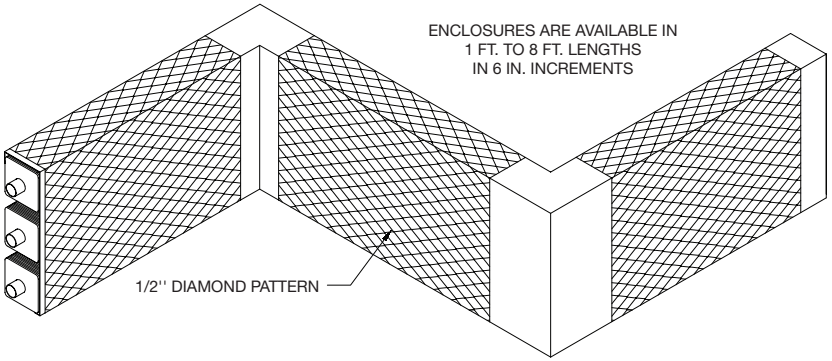

ACCESSORIES

SLIP - IN SECOND ROW BRACKET

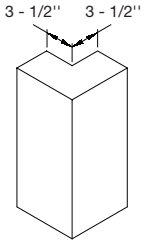

"OC"
OUTSIDE CORNER

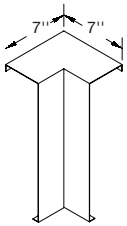

"IC"
INSIDE CORNER

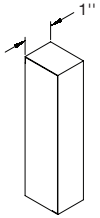

"EC"
END CAP
(LEFT HAND SHOWN)

"WT"
WALL TRIM STRIP
3 - 1/2'', 5'', 7 - 1/2''

MODEL	PIPE SIZE		FIN SIZE	A	B
	STEEL	COPPER			
EXO	1 - 1/4'' - 2''	1'', 1 - 1/4''	3 - 1/4'' x 3 -1/4''	3 - 1/2'' 9 - 1/2'' 15 - 1/2''	1 - 31/32''

* ALL ACCESSORIES OVERLAP
** BUTT - TYPE OPTIONAL

ISO 9001
BUREAU VERITAS
Certification
Nº 209940

CONTRACTOR _____ ELEMENT _____

ARCHITECT _____ RATING _____ BTU _____ A.W.T. _____ E.A.T.

ENGINEER _____ BACKPLATE _____ FULL _____ PARTIAL _____

REPRESENTATIVE _____ ENCL. GAUGE _____ MATERIAL _____

LOCATION _____ COLOR _____ DAMPER _____

ZEHNDER RITTLING
100 RITTLING BLVD. • BUFFALO, NY USA 14220

JOB:

ENCLOSURE MODEL: **EXO3**

DATE: **January 2011** | DWG.NO.: **EXO3**

zehnder Rittling

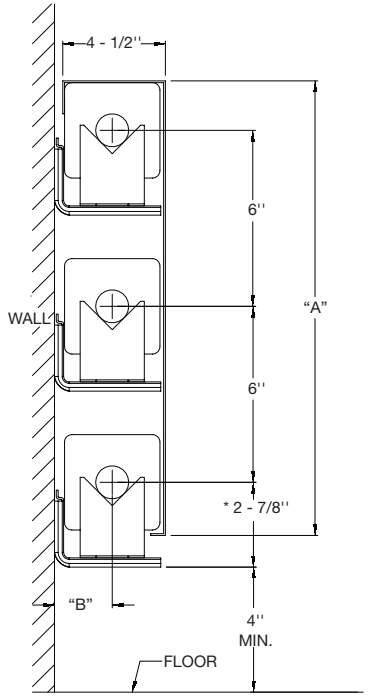

* CENTERLINES ARE BASED ON 1'' COPPER TUBE

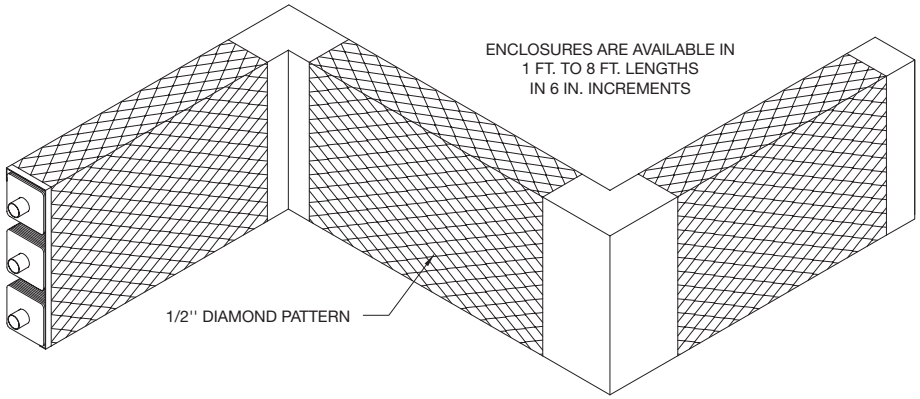

ACCESSORIES

SLIP - IN SECOND ROW BRACKET

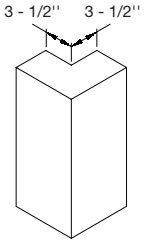

"OC"
OUTSIDE CORNER

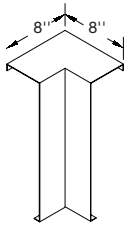

"IC"
INSIDE CORNER

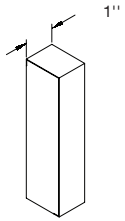

"EC"
END CAP
(LEFT HAND SHOWN)

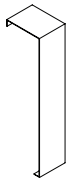

"WT"
WALL TRIM STRIP
3 - 1/2'', 5'', 7 - 1/2''

MODEL	PIPE SIZE		FIN SIZE	A	B
	STEEL	COPPER			
EXO	1 - 1/4'' - 2''	1'', 1 - 1/4''	4 - 1/4'' x 4 -1/4''	4 - 1/2'' 10 - 1/2'' 16 - 1/2''	2 - 17/32''

* ALL ACCESSORIES OVERLAP
** BUTT - TYPE OPTIONAL

ISO 9001
BUREAU VERITAS
Certification
Nº 209940

CONTRACTOR _____ ELEMENT _____

ARCHITECT _____ RATING _____ BTU _____ A.W.T. _____ E.A.T.

ENGINEER _____ BACKPLATE _____ FULL _____ PARTIAL _____

REPRESENTATIVE _____ ENCL. GAUGE _____ MATERIAL _____

LOCATION _____ COLOR _____ DAMPER _____

ZEHNDER RITTLING
100 RITTLING BLVD. • BUFFALO, NY USA 14220

JOB:

ENCLOSURE MODEL: **EXO4**

DATE: **January 2011** | DWG.NO.: **EXO4**

zehnder Rittling

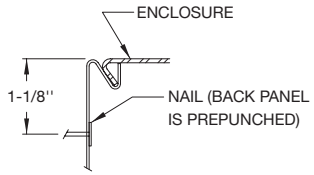

BACK PANEL DETAIL

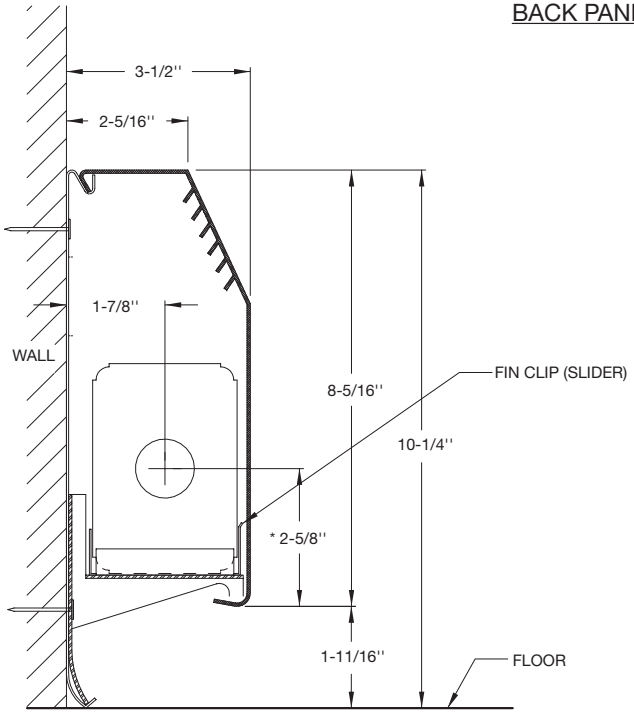

* CENTERLINES BASED ON 1'' COPPER TUBE

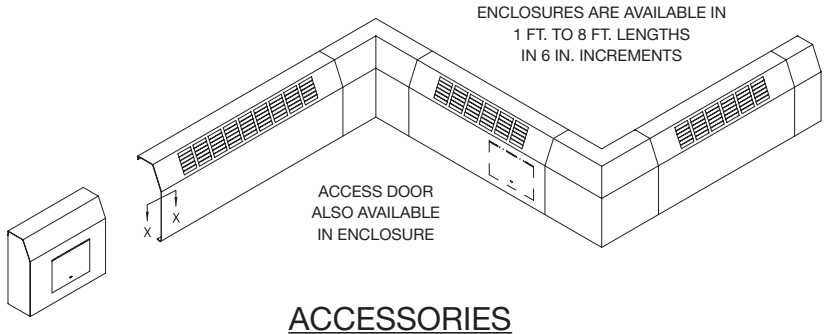

ACCESSORIES

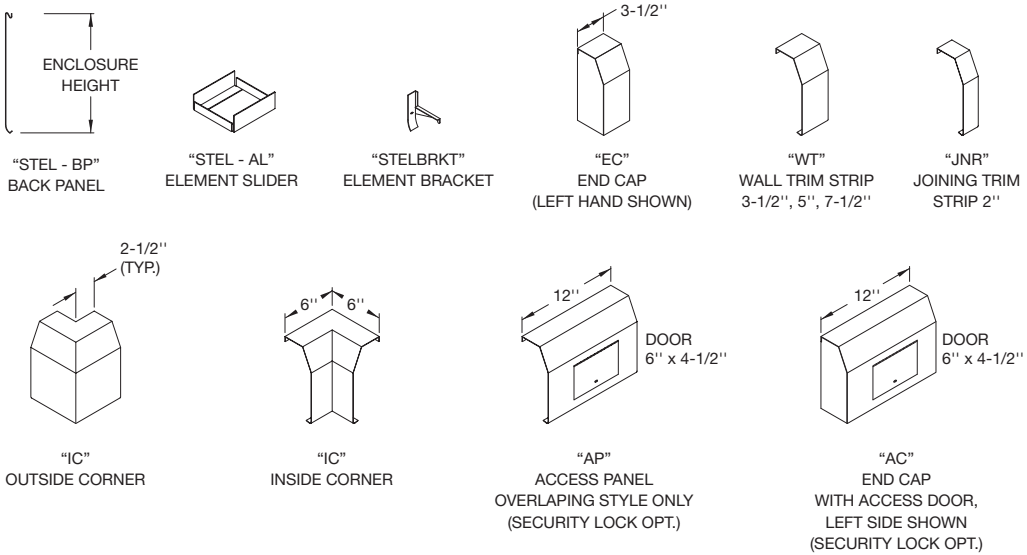

MODEL	PIPE SIZE	FIN SIZE
STEL	COPPER	
	3/4'', 1'', 1-1/4''	2-3/4'' x 4''

"WS"
WALL TRIM SUPPORT

KNOB DAMPER

NOTE:
1) ALL ACCESSORIES OVERLAP (EXCEPT AS NOTED)
2) INTERLOCKING STYLE OPTIONAL (EXCEPT AS NOTED)
3) ALL ENCLOSURES AND ACCESSORIES ARE WITHOUT JOGGLES AND JOINERS

ISO 9001
BUREAU VERITAS
Certification
N° 209940

CONTRACTOR _____ ELEMENT _____

ARCHITECT _____ RATING _____ BTU _____ A.W.T. _____ E.A.T.

ENGINEER _____ BACKPLATE _____ FULL _____ PARTIAL _____

REPRESENTATIVE _____ ENCL. GAUGE _____ MATERIAL _____

LOCATION _____ COLOR _____ DAMPER _____

ZEHNDER RITTLING
100 RITTLING BLVD. • BUFFALO, NY USA 14220

JOB:

ENCLOSURE MODEL: **STEL**

DATE: **January 2011** | DWG.NO.: **STEL**